JC3504 Robot Technology

Lecture 5: Inverse Kinematics and Differential Kinematics

Inverse Kinematics *(covered in next lecture)*

Inverse Kinematics calculates the joint parameters required to achieve a desired position and orientation of the end-effector.

i.e. given the position and orientation of the end-effector ${}^{S}_{T}T$, with the lengths of links, what are the joint angles (θs)?

$$q = f^{-1}\left({}^{S}_{T}T\right)$$

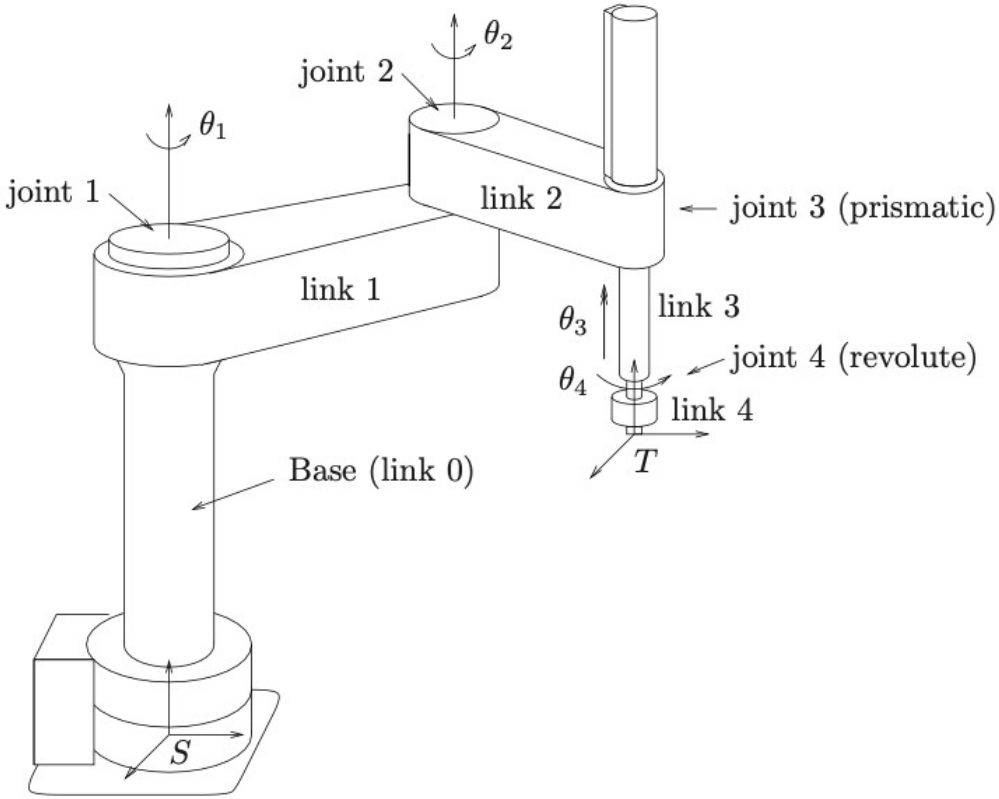

Outline

Frames with Standard Names

Inverse Kinematics

Differential Kinematics

Frames with Standard Names

Frames with Standard Names

As a matter of convention, we assign specific names and locations to certain "standard" frames associated with a robot and its workspace.

- The base frame, {B} = {0}, is located at the base of the manipulator.
- The station frame, {S}, is located in a task-relevant location, e.g. the working desk.
- The wrist frame, {W} = {n}, is affixed to the last link of the manipulator.
- The tool frame, {T}, is affixed to the end of any tool the robot holds.
- The goal frame, {G}, is the destination location to which the robot is to move the tool. That is, after moving, {G} = {T}.

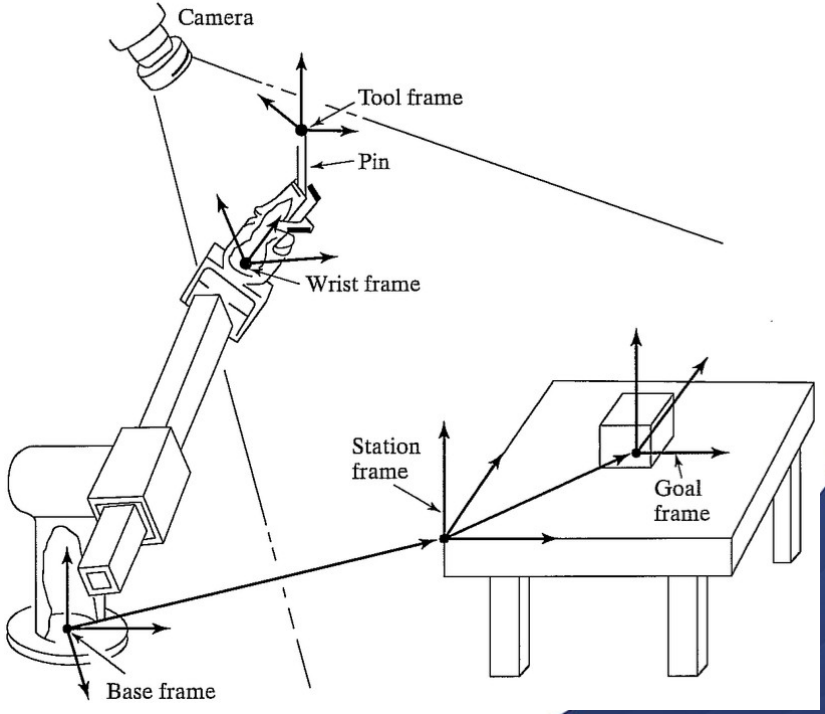

Where Is the Tool?

All the objects on the working table use the station frame as the coordinate, so, when the robot works, we need to calculate the value of the tool frame, {T}, relative to the station frame,{S}, i.e. to find ${}^{S}_{T}T$.

In the previous lecture, we have found ${}^{B}_{W}T = {}^{0}_{n}T$, and given ${}^{B}_{S}T$ and ${}^{W}_{T}T$,

$$ {}^{S}_{T}T = {}^{B}_{S}T^{-1}\,{}^{B}_{W}T\,{}^{W}_{T}T $$

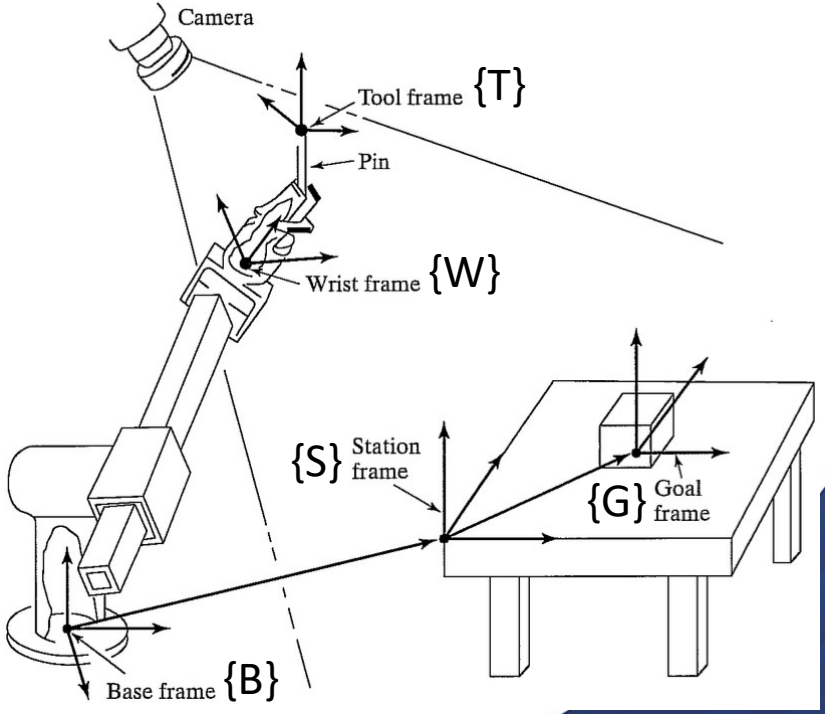

Goal of Inverse Kinematics

The goal of inverse kinematics is to find a robot configuration (i.e. the parameters θ_1, θ_2, θ_3, ...) given ${}^{0}_{n}T$ (i.e. given {B} and {T}={G}).

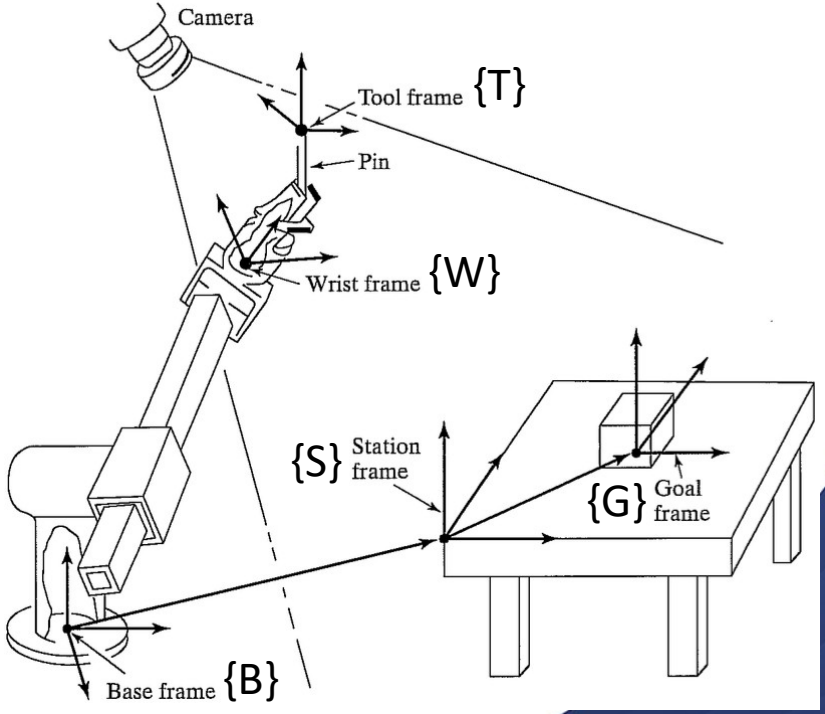

Solvability

Existence of solutions

- The solution may not exist, because the arm may not be able to reach the target.

Multiple solutions

- It can be multiple solutions, because the arm can reach the target with different poses.
- If there is no obstacle, we choose the closest solution to the current pose.

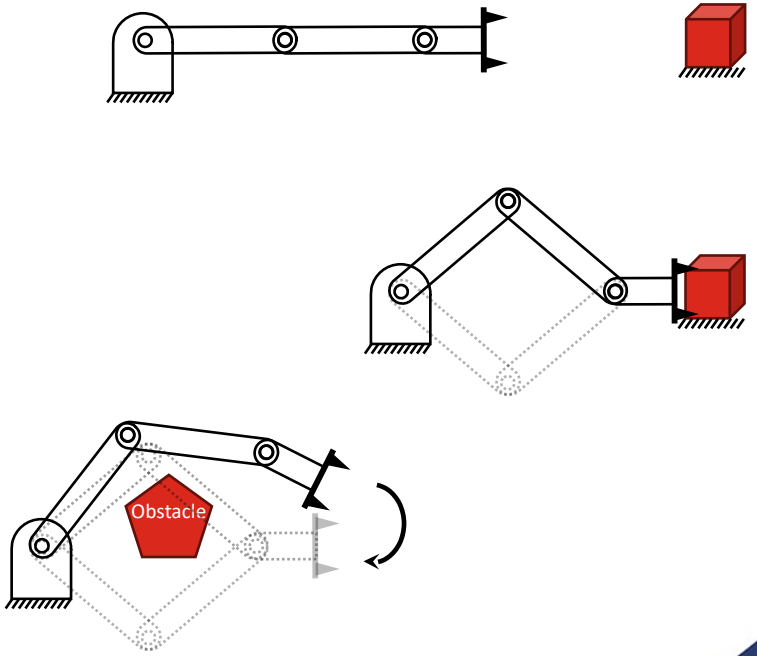

Solvability

Closed-form Solutions (Analytical solutions)

- give exact answers. They use formulas to solve problems.
- *Currently, people can definitely find the analytical solutions when: a manipulator with six revolute joints has three neighbouring joint axes intersect at a point.*
  Or: a manipulator with six revolute joints has three neighbouring joint axes are parallel.

Numerical solutions

- Find approximate solutions through iterative calculations
- *All systems with revolute and prismatic joints having a total of six degrees of freedom in a single series chain have numerical solution.*

Closed-form Solutions *(algebraic solution)*

Consider the three-link planar manipulator, first, we can use the link parameters to find the kinematic equations :

$$ {}^{B}_{W}T = {}^{0}_{3}T = \begin{bmatrix} c_{123} & -s_{123} & 0 & l_1c_1 + l_2c_{12} \\ s_{123} & c_{123} & 0 & l_1s_1 + l_2s_{12} \\ 0 & 0 & 1 & 0 \\ 0 & 0 & 0 & 1 \end{bmatrix} $$

where

$$ c_{123} = \cos(\theta_1 + \theta_2 + \theta_3) $$
$$ s_{12} = \sin(\theta_1 + \theta_2) $$

and so on.

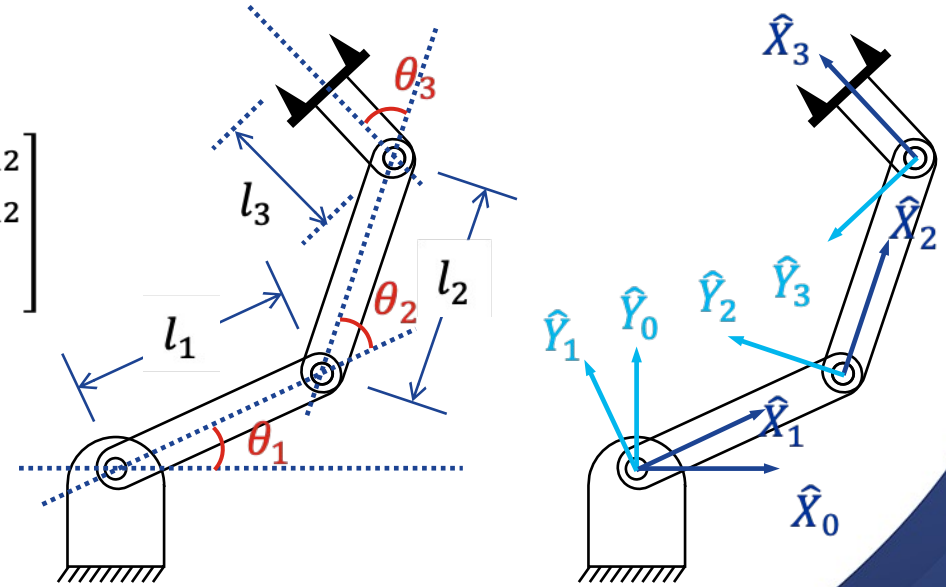

Closed-form Solutions *(algebraic solution)*

Suppose the necessary transformations have been done such that the goal point is a specification of the wrist frame relative to the base frame, that is, ${}^{B}_{W}T_G$

$$ {}^{B}_{W}T_G = \begin{bmatrix} c_\phi & -s_\phi & 0 & x \\ s_\phi & c_\phi & 0 & y \\ 0 & 0 & 1 & 0 \\ 0 & 0 & 0 & 1 \end{bmatrix} $$

$$ {}^{B}_{W}T = \begin{bmatrix} c_{123} & -s_{123} & 0 & l_1c_1 + l_2c_{12} \\ s_{123} & c_{123} & 0 & l_1s_1 + l_2s_{12} \\ 0 & 0 & 1 & 0 \\ 0 & 0 & 0 & 1 \end{bmatrix} $$

So, the goal is to find a solution of $\{\theta_1, \theta_2, \theta_3\}$ such that ${}^{B}_{W}T_G = {}^{B}_{W}T$.

Closed-form Solutions *(algebraic solution)*

When ${}^{B}_{W}T_G = {}^{B}_{W}T$, we have

$$\begin{bmatrix} c_\phi & -s_\phi & 0 & x \\ s_\phi & c_\phi & 0 & y \\ 0 & 0 & 1 & 0 \\ 0 & 0 & 0 & 1 \end{bmatrix} = \begin{bmatrix} c_{123} & -s_{123} & 0 & l_1c_1 + l_2c_{12} \\ s_{123} & c_{123} & 0 & l_1s_1 + l_2s_{12} \\ 0 & 0 & 1 & 0 \\ 0 & 0 & 0 & 1 \end{bmatrix}$$

$$\Rightarrow \left.\begin{aligned} c_\phi &= c_{123} \\ s_\phi &= s_{123} \end{aligned}\right\}$$ The two equations express the same constrain: $\phi = \theta_1 + \theta_2 + \theta_3$

$$\left.\begin{aligned} x &= l_1c_1 + l_2c_{12} \\ y &= l_1s_1 + l_2s_{12} \end{aligned}\right\}$$ The two equations two unknows: θ_1, θ_2

Closed-form Solutions *(algebraic solution)*

$$\left.\begin{aligned} x &= l_1 c_1 + l_2 c_{12} \\ y &= l_1 s_1 + l_2 s_{12} \end{aligned}\right\} \Rightarrow x^2 + y^2 = l_1^2 c_1^2 + l_2^2 c_{12}^2 + 2 l_1 l_2 c_1 c_{12} + l_1^2 s_1^2 + l_2^2 s_{12}^2 + 2 l_1 l_2 s_1 s_{12}$$

$$\Downarrow \sin^2\theta + \cos^2\theta = 1$$

$$x^2 + y^2 = l_1^2 + l_2^2 + 2 l_1 l_2 c_1 c_{12} + 2 l_1 l_2 s_1 s_{12}$$

$$\Downarrow \cos(\beta - \alpha) = \cos(\alpha)\cos(\beta) + \sin(\alpha)\sin(\beta)$$

$$x^2 + y^2 = l_1^2 + l_2^2 + 2 l_1 l_2 c_2$$

$$\Rightarrow c_2 = \frac{x^2 + y^2 - l_1^2 - l_2^2}{2 l_1 l_2} \Rightarrow \theta_2 = \cos^{-1}\left(\frac{x^2 + y^2 - l_1^2 - l_2^2}{2 l_1 l_2}\right)$$

Closed-form Solutions *(algebraic solution)*

Then, we are going to find θ_1

Let $k_1 = l_1 + l_2 c_2$, and $k_2 = l_2 s_2$ (given c_2, $s_2 = \pm\sqrt{1 - c_2^2}$, so, k_1, k_2 are known). then

$$x = l_1 c_1 + l_2 c_{12} = \mathrm{k}_1 \mathrm{c}_1 - \mathrm{k}_2 \mathrm{s}_1$$
$$y = l_1 s_1 + l_2 s_{12} = \mathrm{k}_1 \mathrm{s}_1 + \mathrm{k}_2 \mathrm{c}_1$$

Let $r = +\sqrt{k_1^2 + k_2^2}$, and $\gamma = Atan2(k_2, k_1)$, then, $k_1 = r\cos\gamma$, $k_2 = r\sin\gamma$

$$x = \mathrm{k}_1 \mathrm{c}_1 - \mathrm{k}_2 \mathrm{s}_1 \implies \frac{x}{r} = \cos\gamma\cos\theta_1 - \sin\gamma\sin\theta_1 = \cos(\gamma + \theta_1)$$
$$y = \mathrm{k}_1 \mathrm{s}_1 + \mathrm{k}_2 \mathrm{c}_1 \implies \frac{y}{r} = \cos\gamma\sin\theta_1 + \sin\gamma\cos\theta_1 = \sin(\gamma + \theta_1)$$

$$\implies \gamma + \theta_1 = Atan2(y, x) \implies \theta_1 = Atan2(y, x) - Atan2(k_2, k_1)$$

Closed-form Solutions *(algebraic solution)*

Finally, because $\phi = \theta_1 + \theta_2 + \theta_3$, $\theta_3 = \phi - \theta_1 - \theta_2$

In summary, an algebraic approach to solving kinematic equations is basically one of manipulating the given equations into a form for which a solution is known. It turns out that, for many common geometries, several forms of transcendental equations commonly arise.

Closed-form Solutions *(geometric solution)*

In a geometric approach to finding a manipulator's solution, we try to decompose the spatial geometry of the arm into several plane-geometry problems.

For many manipulators (particularly when the $\alpha_i = 0$ or ± 90) this can be done quite easily.

Joint angles can then be solved for by using the tools of plane geometry.

Closed-form Solutions *(geometric solution)*

Consider ΔOAB we can apply the "law of cosines" to solve for θ_2 :

$$x^2 + y^2 = l_1^2 + l_2^2 - 2l_1 l_2 \cos(180 - \theta_2)$$

$$\Longrightarrow c_2 = \frac{x^2 + y^2 - l_1^2 - l_2^2}{2l_1 l_2}$$

$$\Longrightarrow \theta_2 = \cos^{-1}\left(\frac{x^2 + y^2 - l_1^2 - l_2^2}{2l_1 l_2}\right)$$

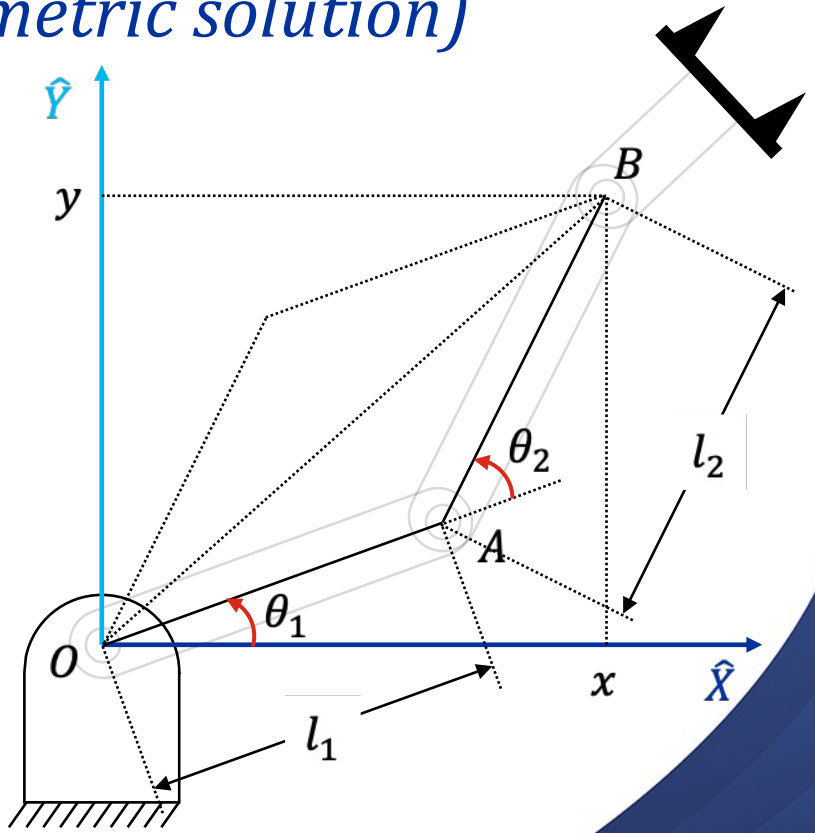

Closed-form Solutions *(geometric solution)*

After we find the solutions, we need to verify them according to the implied conditions. For θ_2:

$$\sqrt{x^2 + y^2} \leq l_1 + l_2$$

$$0 \leq \theta_2 \leq 180$$

The other possible solution (the one indicated by the dashed-line triangle) is found by symmetry to be $\theta'_2 = -\theta_2$.

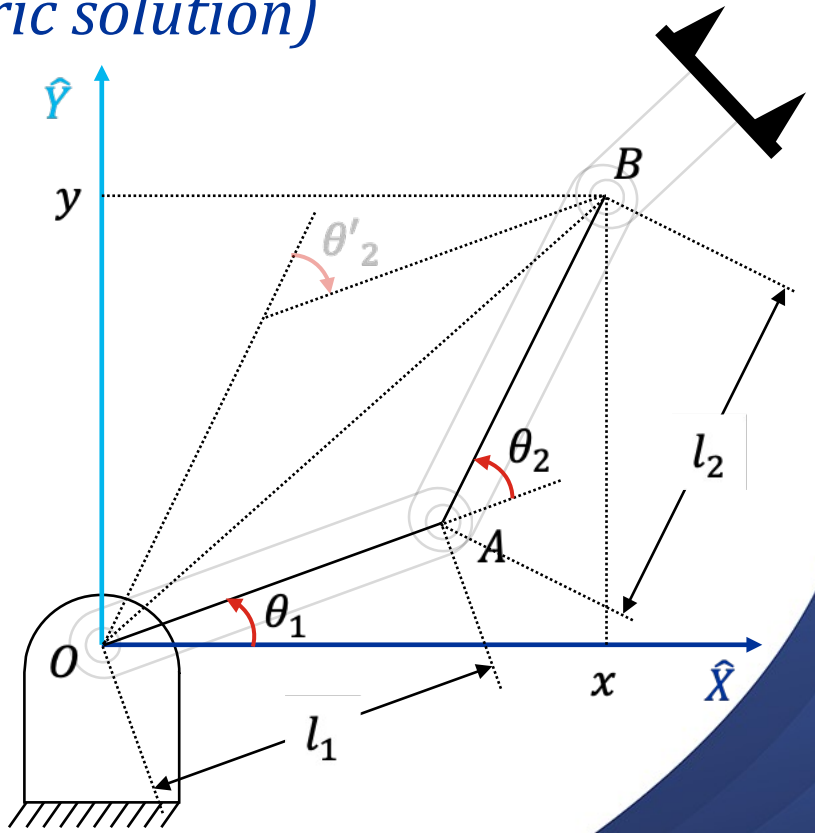

Closed-form Solutions *(geometric solution)*

To solve for θ_1, we find expressions for angles ψ and β.

First,

$$\beta = Atan2(y, x)$$

We again apply the law of cosines to find ψ:

$$\cos\psi = \frac{x^2 + y^2 + l_1^2 - l_2^2}{2l_1\sqrt{x^2 + y^2}}$$

Finally:

$$\theta_1 = \beta \pm \psi, 0 \leq \theta_1 \leq 180$$

$$\theta_3 = \phi - \theta_1 - \theta_2$$

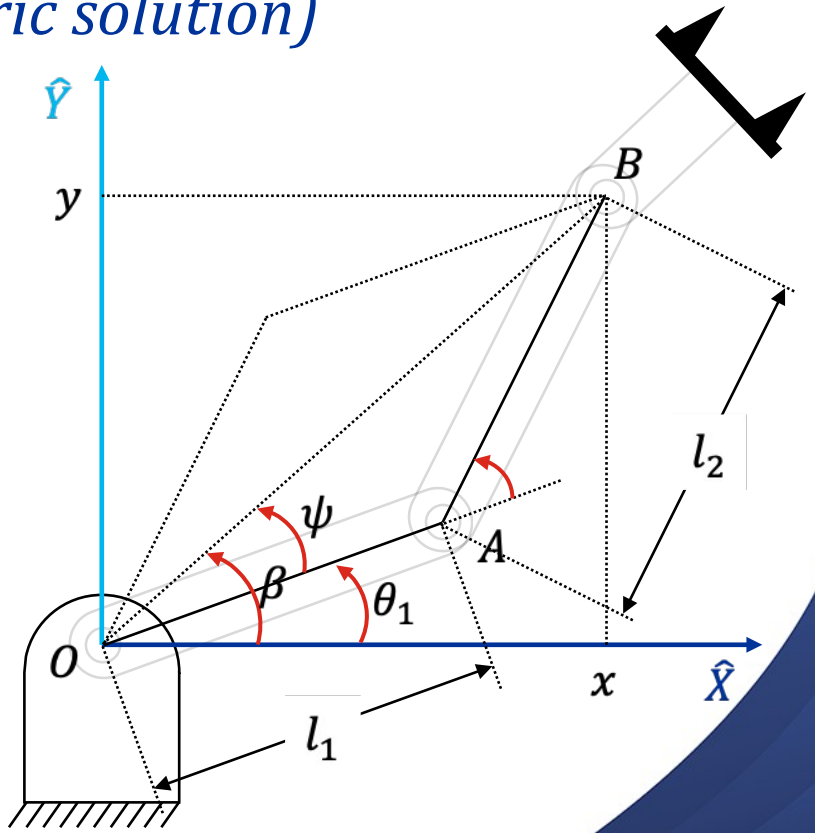

1495 UNIVERSITY OF ABERDEEN

Pieper's Solution When Axis 4,5,6 Intersect

The basic idea of Pieper is to split the manipulator into two chains

- Chain 1: link 0, link 1, link 2, link 3
- Chain 2: link 4, link 5, link 6

Since the axis 4,5,6 intersect, the lengths of link 4,5,6 are 0. So, the twist position i.e.

$$^{0}P_{6org} \equiv {}^{0}P_{4org}$$

Since axis 4,5,6 provide 3 rotation freedom, it can point any position. Therefore, chain 1 is only used to reach the target position, and chain 2 is only used to point the target orientation.

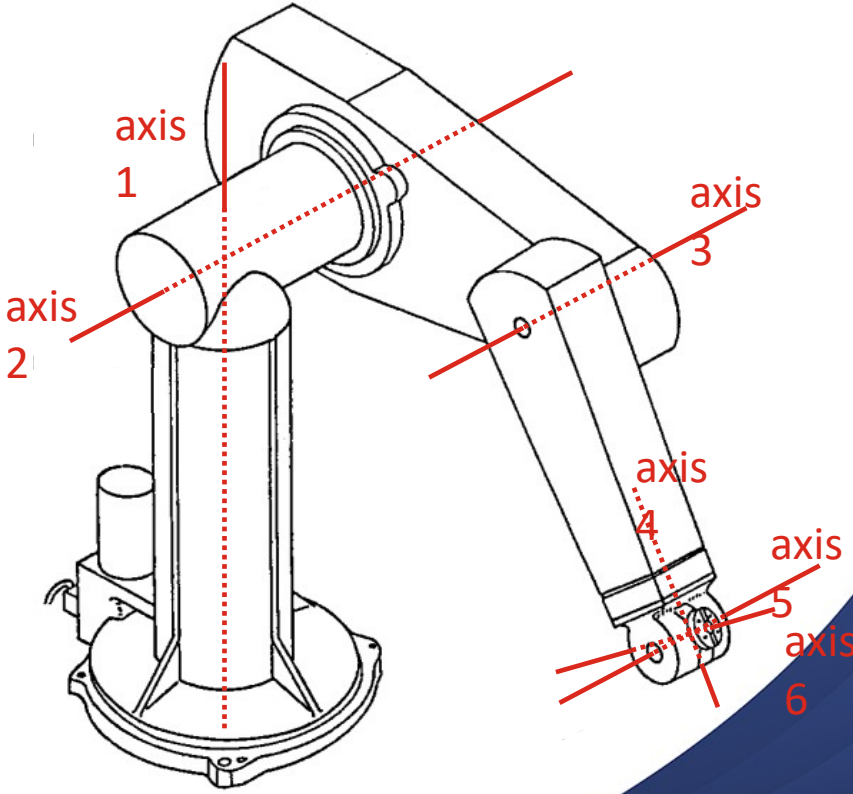

Pieper's Solution Process

The steps of Pieper's Solution are:

1. Find ${}^{0}P_{4org}$
2. Find θ_1, θ_2, θ_3 according to ${}^{0}P_{4org}$
3. Find θ_4, θ_5, θ_6 through Euler angles

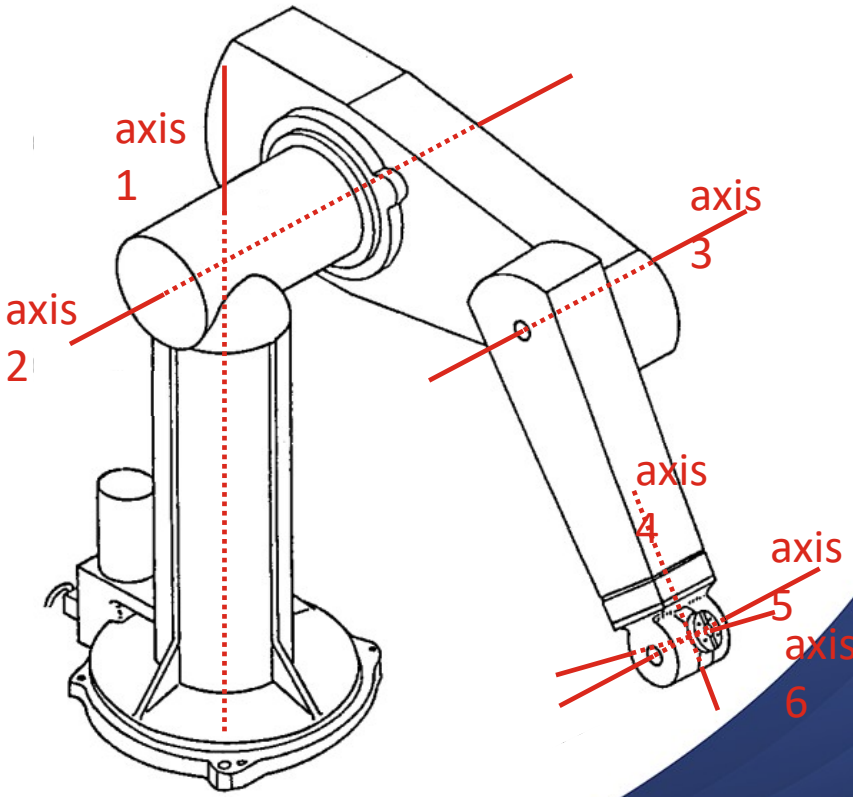

Find ${}^{0}P_{4org}$

$$ {}^{i-1}_{\ \ i}T = \begin{bmatrix} c\,\theta_i & -s\,\theta_i & 0 & a_{i-1} \\ s\,\theta_i\, c\,\alpha_{i-1} & c\,\theta_i\, c\,\alpha_{i-1} & -s\,\alpha_{i-1} & -s\,\alpha_{i-1}\, d_i \\ s\,\theta_i\, s\,\alpha_{i-1} & c\,\theta_i\, s\,\alpha_{i-1} & c\,\alpha_{i-1} & c\,\alpha_{i-1}\, d_i \\ 0 & 0 & 0 & 1 \end{bmatrix} $$

Let ${}^{0}P_{4org} = [x \quad y \quad z \quad 1]^T$

$$ {}^{0}P_{4org} = {}^{0}_{1}T\,{}^{1}_{2}T\,{}^{2}_{3}T\,{}^{3}P_{4org} $$

$$ {}^{0}P_{4org} = {}^{0}_{1}T\,{}^{1}_{2}T\,{}^{2}_{3}T \begin{bmatrix} a_3 \\ -d_4\, s\,\alpha_3 \\ d_4\, c\,\alpha_3 \\ 1 \end{bmatrix} = {}^{0}_{1}T\,{}^{1}_{2}T \begin{bmatrix} f_1 \\ f_2 \\ f_3 \\ 1 \end{bmatrix} $$

$$ f_1 = a_3 c_3 + d_4 s\alpha_3 s_3 + a_2 $$
$$ f_2 = a_3 c\alpha_2 s_3 - d_4 s\alpha_3 c\alpha_2 c_3 - d_4 s\alpha_2 c\alpha_3 - d_3 s\alpha_2 $$
$$ f_3 = a_3 s\alpha_2 s_3 - d_4 s\alpha_3 s\alpha_2 c_3 + d_4 c\alpha_2 c\alpha_3 + d_3 c\alpha_2 $$

$$ {}^{0}P_{4org} = \begin{bmatrix} c_1 g_1 - s_1 g_2 \\ s_1 g_1 + c_1 g_2 \\ g_3 \\ 1 \end{bmatrix} $$

$$ g_1 = c_2 f_1 - s_2 f_2 + a_1 $$
$$ g_2 = s_2 c\alpha_1 f_1 + c_2 c\alpha_1 f_2 - s\alpha_1 f_3 - d_2 s\alpha_1 $$
$$ g_3 = s_2 s\alpha_1 f_1 + c_2 s\alpha_1 f_3 + c\alpha_1 f_3 + d_2 c\alpha_1 $$

NB: since the expressions are too much long, we cannot fully extent them to show

Find $\theta_1, \theta_2, \theta_3$

Let $r = \left|{}^0P_{4org}\right|^2 = g_1^2 + g_2^2 + g_3^2$

Let
$$k_1 = f_1$$
$$k_2 = -f_2$$
$$k_3 = f_1^2 + f_2^2 + f_3^2 + a_1^2 + d_2^2 + 2d_2f_3$$
$$k_4 = f_3c\alpha_1 + d_2c\alpha_1$$

$$\Rightarrow \left.\begin{aligned} r &= (k_1c_2 + k_2s_2)2a_1 + k_3 \\ z &= (k_1s_2 + k_2c_2)s\alpha_1 + k_4 \end{aligned}\right\}$$

Exclude θ_1, so only contain two unknows: θ_2, θ_3

When we find θ_2, θ_3, we plug them into ${}^0P_{4org}$ to solve for θ_1.

Find $\theta_4, \theta_5, \theta_6$

Having obtained θ_2, θ_2, θ_3, we can compute ${}^0_4R|_{\theta_4=0}$, which notation means the orientation of link frame {4} relative to the base frame when $\theta_4 = 0$.

The desired orientation of {6} differs from this orientation only by the action of the last three joints. Because the problem was specified as given ${}^0_6R$, we can compute

$$ {}^4_6R\Big|_{\theta_4=0} = {}^0_4R^{-1}\Big|_{\theta_4=0}\,{}^0_6R $$

For many manipulators, these last three angles can be solved for by using exactly the Z-Y-Z Euler angle solution applied to ${}^0_4R|_{\theta_4=0}$.

There are always two solutions for these last three joints, so the total number of solutions for the manipulator will be twice the number found for the first three joints.

Differential Kinematics (Velocity)

1495 UNIVERSITY OF ABERDEEN

Differential Kinematics (Velocity)

So far, we have investigated the kinematic problem and operated in the space of positions, that is, how to map joint angles with end effector poses.

This section will introduce the differential kinematics problem and operated in the space of velocities, i.e. how to map joint velocities with end-effector velocity twists (NB: velocity is derivative of position, hence the name "differential").

Velocity of the End-effector

To describe the velocity of an end-effector, six quantities are required: three to represent the translational velocity in the x, y, and z directions, and three for the angular velocity to capture the rotational rates around each of the three axes.

We can now write translational and rotational velocities in a 6×1 generalised velocity vector as:

$$\upsilon = [v_x \quad v_y \quad v_z \quad \omega_x \quad \omega_y \quad \omega_z]^T$$

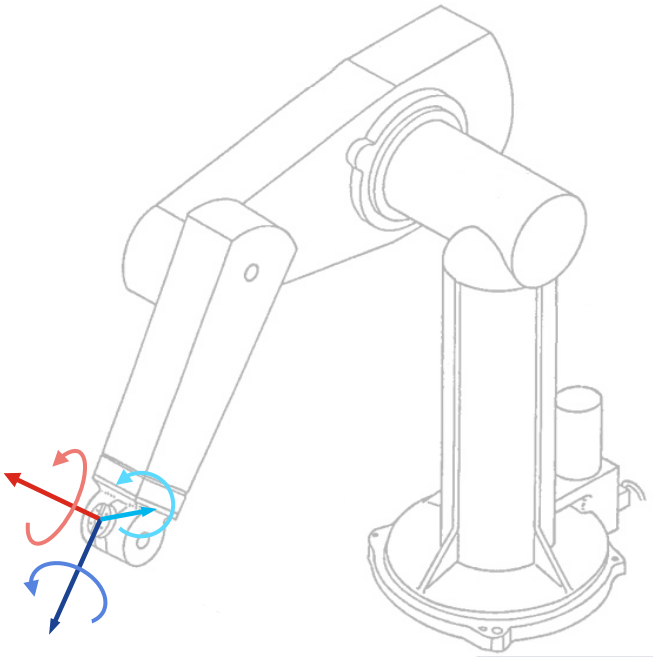

Velocity of the End-effector

We assume that the final three axes of the robot arm converge at a single point (as depicted in the design shown on the right), where ω_x, ω_y and ω_z represent the angular orientations of axes 4, 5, and 6, respectively. Hence,

$$\upsilon = [v_x \quad v_y \quad v_z \quad \theta_4 \quad \theta_5 \quad \theta_6]^T$$

Given that the θ values are provided, we will bypass the angles and focus our analysis on the linear velocity:

$$v = [v_x \quad v_y \quad v_z]^T$$

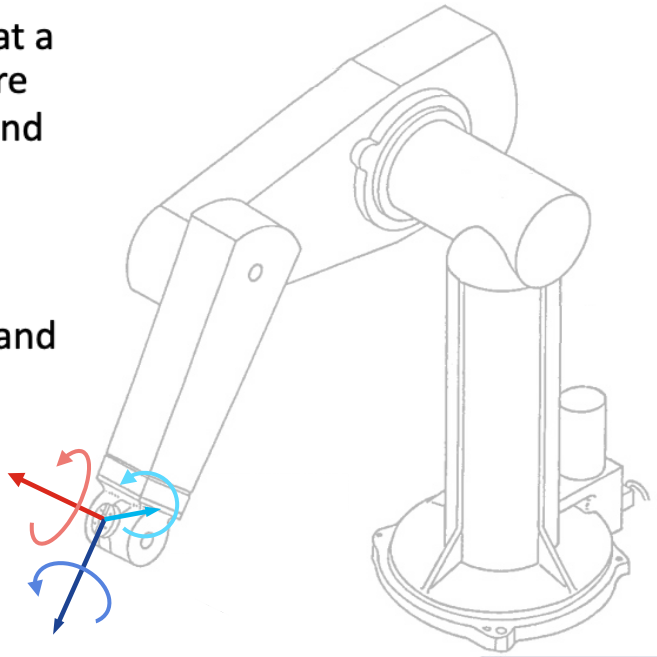

Velocity of the End-effector

Just as with generalised velocity, the velocity of an end-effector can be expressed by subtracting its state at time $t = t_i + \Delta t$ from its state at $t = t_i$. However, the state of the end-effector also includes both position and rotational angles.

$$v = \frac{P_{t_i+\Delta t} - P_{t_i}}{\Delta t}$$

Where P denotes the position of the end-effector, which is a function of time.

$$P_t = [x(t) \quad y(t) \quad z(t)]^T$$

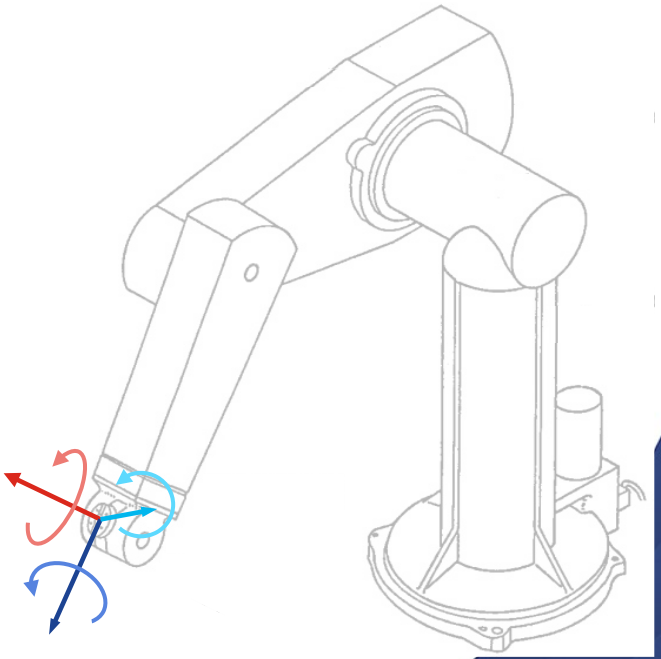

Velocity of the End-effector

Recall that the position of the end-effector (P) can be find by the transformance matrix ${}^{0}_{6}T$,

$$P = {}^{0}_{6}T[0 \quad 0 \quad 0 \quad 1]^T$$

Here, ${}^{0}_{6}T$ transforms the origin coordinates into the coordinates of the end-effector.

Since ${}^{0}_{6}T$ depends on θs (angles of joints) ,

We rewrite P as a function of θs (denoted by Θ)

$$P_t = f(\Theta) = {}^{0}_{6}T_{\Theta}[0 \quad 0 \quad 0 \quad 1]^T, \Theta = [\theta_1, \dots, \theta_6]^T$$

Since θs depend on time, we rewrite Θ as a function on time.

$$\Theta(t) = [\theta_1(t), \dots, \theta_6(t)]^T$$

So

$$P_t = f\big(\Theta(t)\big)$$

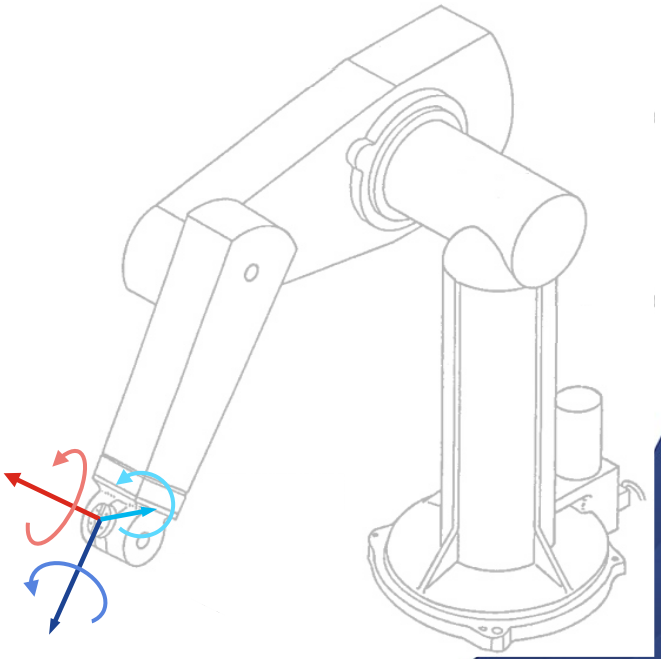

UNIVERSITY OF ABERDEEN

Differential Form

When $\Delta t \longrightarrow 0$, v becomes the instantaneous speed from average speed.

$$v = \frac{P_{t_i+\Delta t} - P_{t_i}}{\Delta t} = \frac{f\big(\Theta(t_i+\varepsilon)\big) - f\big(\Theta(t_i)\big)}{\varepsilon} = \frac{df}{dt} = \frac{df}{d\Theta}\frac{d\Theta}{dt}$$

For each entry of v,

$$v_x = \frac{df_x}{d\Theta}\frac{d\Theta}{dt} = \frac{\partial f_x}{\partial \theta_1}\frac{d\theta_1}{dt} + \cdots + \frac{\partial f_x}{\partial \theta_6}\frac{d\theta_6}{dt}$$

$$v_y = \frac{df_y}{d\Theta}\frac{d\Theta}{dt} = \frac{\partial f_y}{\partial \theta_1}\frac{d\theta_1}{dt} + \cdots + \frac{\partial f_y}{\partial \theta_6}\frac{d\theta_6}{dt}$$

$$v_z = \frac{df_z}{d\Theta}\frac{d\Theta}{dt} = \frac{\partial f_z}{\partial \theta_1}\frac{d\theta_1}{dt} + \cdots + \frac{\partial f_z}{\partial \theta_6}\frac{d\theta_6}{dt}$$

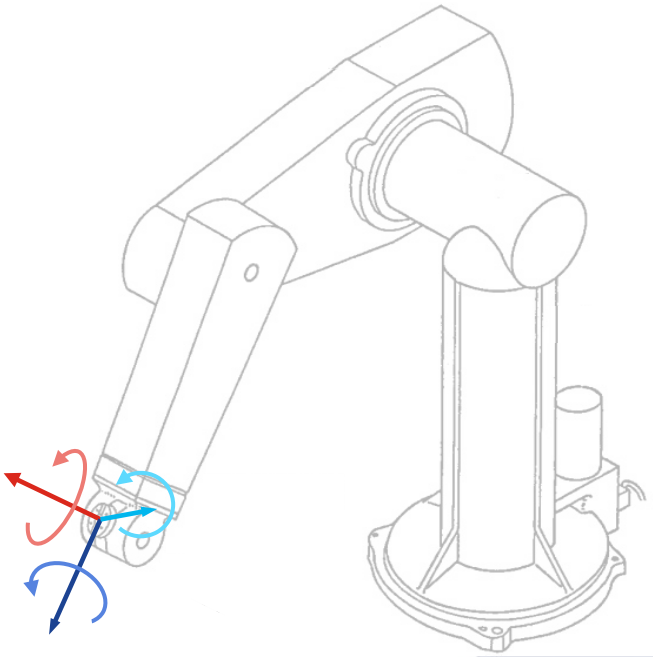

Jacobian

$$\begin{cases} v_x = \dfrac{df_x}{d\Theta}\dfrac{d\Theta}{dt} = \dfrac{\partial f_x}{\partial \theta_1}\dfrac{d\theta_1}{dt} + \dfrac{\partial f_x}{\partial \theta_2}\dfrac{d\theta_2}{dt} + \cdots + \dfrac{\partial f_x}{\partial \theta_6}\dfrac{d\theta_6}{dt} \\ v_y = \dfrac{df_y}{d\Theta}\dfrac{d\Theta}{dt} = \dfrac{\partial f_y}{\partial \theta_1}\dfrac{d\theta_1}{dt} + \dfrac{\partial f_y}{\partial \theta_2}\dfrac{d\theta_2}{dt} + \cdots + \dfrac{\partial f_y}{\partial \theta_6}\dfrac{d\theta_6}{dt} \\ v_z = \dfrac{df_z}{d\Theta}\dfrac{d\Theta}{dt} = \dfrac{\partial f_z}{\partial \theta_1}\dfrac{d\theta_1}{dt} + \dfrac{\partial f_z}{\partial \theta_2}\dfrac{d\theta_2}{dt} + \cdots + \dfrac{\partial f_z}{\partial \theta_6}\dfrac{d\theta_6}{dt} \end{cases} \Leftrightarrow v = \begin{bmatrix} v_x \\ v_y \\ v_z \end{bmatrix} = \begin{bmatrix} \dfrac{\partial f_x}{\partial \theta_1} & \cdots & \dfrac{\partial f_x}{\partial \theta_6} \\ \dfrac{\partial f_y}{\partial \theta_1} & \cdots & \dfrac{\partial f_y}{\partial \theta_6} \\ \dfrac{\partial f_z}{\partial \theta_1} & \cdots & \dfrac{\partial f_z}{\partial \theta_6} \end{bmatrix} \begin{bmatrix} \dfrac{d\theta_1}{dt} \\ \vdots \\ \dfrac{d\theta_6}{dt} \end{bmatrix}$$

The matrix of the partial derivatives is called the Jacobian (often referred to as the Jacobian matrix in mathematics), denoted by $\mathcal{J}(\Theta)$. The velocity can be written as:

$$v = \begin{bmatrix} \dot{x} \\ \dot{y} \\ \dot{z} \end{bmatrix} = \mathcal{J}(\Theta)\dot{\Theta}$$

where the dot above a parameter denotes the derivative of it with respect to time.

Forward Differential Kinematics

Forward differential kinematics deals with the problem of computing an expression that relates the generalised velocities at the joints (i.e. the "speed" of our motors) to the generalised velocity of the robot's end-effector.

The velocities at the joints are denoted by $\dot{\Theta}$, and the Jacobine can be derived from transformation matrix ${}^{0}_{6}T$. The forward differential kinematics refer to the process of determining υ the linear and angular velocity of the end-effector.

$$\upsilon = \begin{bmatrix} v_x \\ v_y \\ v_z \\ \omega_x \\ \omega_y \\ \omega_z \end{bmatrix} = \begin{bmatrix} \mathcal{J}(\Theta)\dot{\Theta} \\ \dot{\theta}_4 \\ \dot{\theta}_5 \\ \dot{\theta}_6 \end{bmatrix}$$

Forward Differential Kinematics

For a generalised scenario, such as with an arbitrary robot, the Jacobian encompasses the partial derivatives with respect to all its joint variables.

$$v = \begin{bmatrix} \dot{x} \\ \dot{y} \\ \dot{z} \\ \omega_x \\ \omega_y \\ \omega_z \end{bmatrix} = \mathcal{J}(\Theta)\dot{\Theta} = \begin{bmatrix} \frac{\partial x}{\partial \theta_1} & \frac{\partial x}{\partial \theta_2} & \cdots & \frac{\partial x}{\partial \theta_n} \\ \frac{\partial y}{\partial \theta_1} & \frac{\partial y}{\partial \theta_2} & \cdots & \frac{\partial y}{\partial \theta_n} \\ \vdots & \vdots & \ddots & \vdots \\ \frac{\partial \omega_z}{\partial \theta_1} & \frac{\partial \omega_z}{\partial \theta_2} & \cdots & \frac{\partial \omega_z}{\partial \theta_n} \end{bmatrix} \begin{bmatrix} \dot{\theta}_1 \\ \dot{\theta}_2 \\ \vdots \\ \dot{\theta}_n \end{bmatrix}$$

Inverse Differential Kinematics

It would now be desirable to just invert $\mathcal{J}(\Theta)$ in order to calculate the necessary joint speeds for every desired end-effector speed—a problem known as Inverse Differential Kinematics.

$\mathcal{J}(\Theta)$ is only invertible if the matrix is full rank, otherwise, we can use the pseudo-inverse computation:

$$\mathcal{J} = \mathcal{J}^T(\mathcal{J}\mathcal{J}^T)^{-1}$$

Conclusion

We delved into Inverse Kinematics, essential for calculating the joint configurations needed to position the robot's end-effector at a desired location.

Lastly, Differential Kinematics was discussed, highlighting how robots interpret velocity within their operational environment.